MICRO-1 Architecture
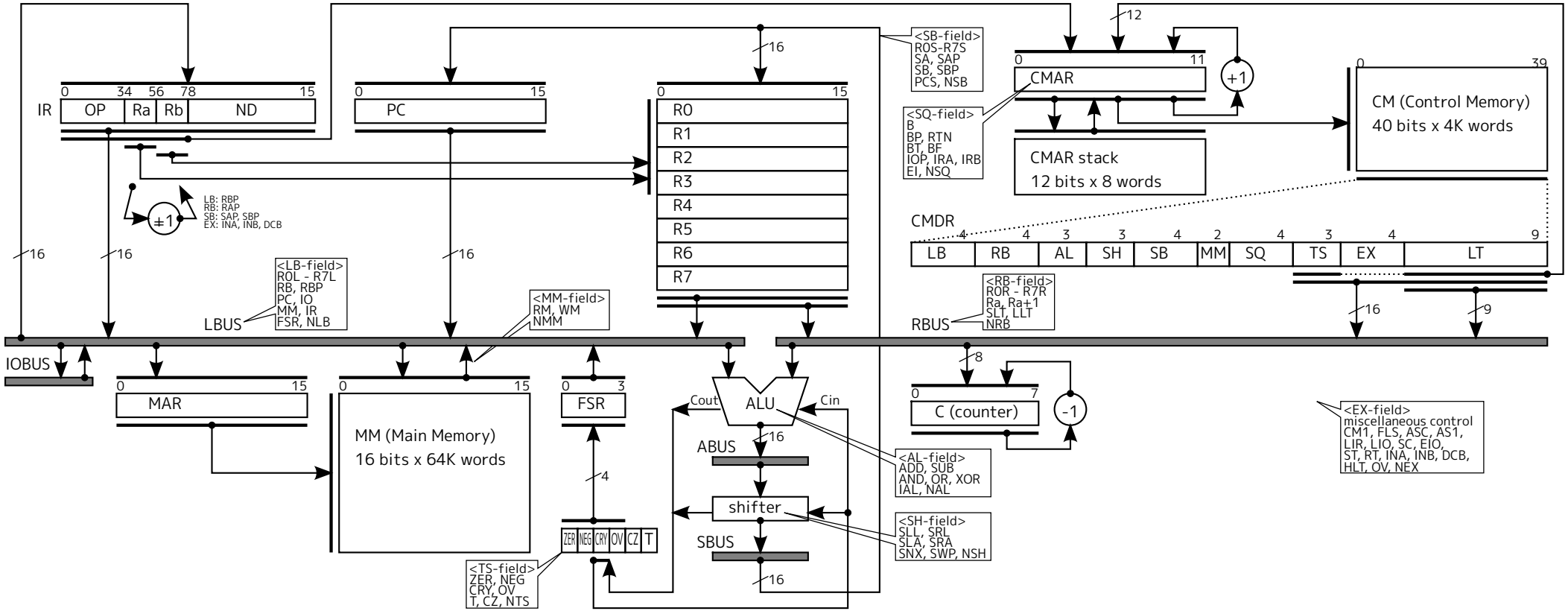
(2015.04.15 by T. Yokota)